BEAUFORT COUNTY SOUTH CAROLINA

1769

SUPPLEMENTAL INFORMATION

For

SC 170

Financial Assistance Application

April 9, 1998

SUPPLEMENTAL INFORMATION

For

SC 170

Financial Assistance Application

April 9, 1998

BEAUFORT COUNTY SOUTH CAROLINA

1769

SUBJECTS FOR DISCUSSION

- WHAT IS THE PROJECT'S COST?
  WHAT DOES THAT COST INCLUDE?

- WHY AN 83-FOOT WIDE BROAD RIVER BRIDGE?

- HOW MUCH WILL BEAUFORT COUNTY CONTRIBUTE FINANCIALLY?

- WILL THE SALES TAX REFERENDUM PASS?

SECTION 1

COST ESTIMATION HISTORY

1 - A

➤ MARCH 7, 1996

MEETING WITH SCDOT
(COLUMBIA, SC)

DISCLAIMER

The following estimates are our best estimates at this time. No plans have been developed, therefore no quantities are available to prepare detailed estimates. All assumptions are based on current and anticipated trends.

PRELIMINARY
(SUBJECT TO CHANGE)

3/7/96

COST ANALYSIS FOR S.C.ROUTE 170
FROM THE CAREER EDUCATION CENTER TO ROAD S-20

Approximate Length of Roadway Widening	8.86 miles
Approximate Length of Chechesee River Bridge	1650 feet
Approximate Length of Broad River Bridge	7320 feet

Roadway Construction Costs (@ $1.7 million/mile) **$15,062,000.00**

Chechesee River Bridge Costs

	Navigational Clearance	Bridge Width	Bridge Construction Cost
Alt. 1	existing	70	$6,352,500.00
Alt 2	existing	82	$7,441,500.00

Broad River Bridge Costs

	Navigational Clearance	Bridge Width	Bridge Construction Cost
Alt. 1	45 ft.	70 ft.	$33,306,000.00
Alt. 2	45 ft.	82 ft.	$39,015,600.00
Alt. 3	65 ft.	70 ft.	$40,992,000.00
Alt. 4	65 ft.	82 ft.	$48,019,200.00

Estimated Bridge Costs Could Range from **$39,658,500.00**
to **$55,460,700.00**

Using 82 ft. bridge widths and a 65 ft. navigational clearance for the Broad River Bridge, the estimated construction cost for the project is: **$70,522,700.00**

Estimated Right of Way Costs

PRELIMINARY
(SUBJECT TO CHANGE)

R/W will be required for approximately 3.71 miles
Estimated Cost $400,000.00 /mile

Total Estimated R/W Cost **$1,484,000.00**

Preliminary Engineering Costs (6% Construction Costs)

Total Estimated PE Cost **$4,231,362.00**

Total Estimated Cost for this portion of S.C. Route 170 **$76,238,062.00**

3/7/96

COST ANALYSIS FOR S.C.ROUTE 170 FROM ROAD S-20 TO S.C. ROUTE 280

Approximate Length of Roadway Widening (Curb and Gutter)	2.5 miles	
Roadway Construction Costs (@ $2.0 million/mile)		**$5,000,000.00**
Estimated Right of Way Costs		
R/W will be required for approximately	2.5 miles	
Estimated Cost	$400,000.00 /mile	
Total Estimated R/W Cost		**$1,000,000.00**
Preliminary Engineering Costs (6% Construction Costs)		
Total Estimated PE Cost		**$300,000.00**
Total Estimated Cost for this portion of S.C. Route 170		**$6,300,000.00**

PRELIMINARY
(SUBJECT TO CHANGE)

3/7/96

ESTIMATE OF TIME

If developed as one project, the estimated time to complete the Engineering and Construction is shown below.

ENGINEERING

		Time
Preparation of Environmental Document and Preliminary Plans		9 months
Right of Way Plans and Preliminary Bridge Plans		7 months
Construction Plans		
	Roadway	concurrent with Bridge Plans Development
	Bridges	15 months
Engineering Total		**31 months**

RIGHT OF WAY

Right of Way Aquisition	concurrent with Const. Plans Development

CONSTRUCTION

Roadway		concurrent with Bridge Construction
Bridges		24 months
Construction Total		**24 months**

PRELIMINARY
(SUBJECT TO CHANGE)

3/7/96

S.C. ROUTE 170 WIDENING
FROM CAREER EDUCATION CENTER TO S.C. ROUTE 280

SUMMARY OF ESTIMATED COST AND TIME

	AMOUNT	TIME
Engineering	$4,531,362.00	31 months
Right of Way Aquisition	$2,484,000.00	concurrent with Engineering
Construction (Assuming 82 ft. bridge widths and 65 ft. navigational clearance for the Broad River Bridge)	$75,522,700.00	24 months
TOTAL	**$82,538,062.00**	**55 months**

All costs are calculated using present day estimates.
For future costs, a 5% per year inflation factor is assumed.

Assuming R/W efforts could begin in 16 months, the estimated **R/W cost** would be – **$2,654,877.00**

Assuming the project is ready for letting in 3 years, the estimated **Construction cost** would be – **$87,717,518.89**

Total Project Cost (including PE & R/W) **$94,903,757.89**

Minimum Construction Costs

PRELIMINARY
(SUBJECT TO CHANGE)

If 70 ft. bridge widths are used and a 45 ft. navigational clearance is provided at the Broad River bridge, the estimated construction cost would be – **$59,720,500.00** (excluding R/W and PE)

Assuming the project is ready for letting in 3 years, the estimated cost for construction would be – **$69,363,702.39** (excluding R/W and PE)

Total Project Cost (including PE & R/W) **$76,549,941.39**

3/7/96
COST ESTIMATE SUMMARY

➤ WITH 70-FOOT WIDE CHECHESSEE RIVER BRIDGE AND 82-FOOT WIDE (X 45 FT HIGH) BROAD RIVER BRIDGE

ROADWAY CONSTRUCTION	$ 20,062,000
BRIDGE CONSTRUCTION	
CHECHESSEE RIVER	6,352,500
BROAD RIVER	39,015,600
RIGHT OF WAY ACQUISITION	2,484,000
PRELIMINARY ENGINEERING	4,531,362
TOTAL	$ 72,445,462

1 - B

➢ FEBRUARY 20, 1997

SCDOT

ENVIRONMENTAL ASSESSMENT REPORT

C. THE BUILD ALTERNATIVES

Initially, a range of build alternatives on existing location were considered. These alternatives included five roadway alternatives, each with three bridge alternatives. As the planning process continued, refinements were made to these alternatives and their strengths and weaknesses reevaluated. Based on this examination, it was determined that a combination of these alternatives, rather than a single alternative, would best address the project's purpose and need and be the most environmentally sensitive. This section provides a description of each individual alternative and the combination Preferred Alternative.

1. Roadway Alternatives

Five roadway alternatives to widen SC 170 from a two-lane roadway to a four-lane divided roadway with either a 14.6-meter (48-foot) grassed median (Alternatives 1N and 1S) or a 4.6-meter (15-foot) grassed median and a 4.6-meter (15-foot) paved median (Alternatives 2N, 2S and 2C) were considered, as shown in Figure II-1. Each alternative was evaluated in terms of their potential impacts, as shown in Table II-2.

TABLE II-2, IMPACTS ASSOCIATED WITH THE ROADWAY ALTERNATIVES

IMPACT	ROADWAY ALTERNATIVES					PREFERRED
	1N	1S	2N	2S	2C	
COST IN $MILLIONS*	$82.3	$83.0	$81.6	$81.6	$81.6	$79.4
DISPLACEES						
HOUSES	10	9	2	4	2	4
MOBILE HOMES	4	5	2	1	1	0
BUSINESSES	4	9	2	2	1	1
NON-PROFITS	2	1	1	0	0	0
RIGHT-OF-WAY	32.8 H (81A)	32.0 H (79 A)	16.6 H (41 A)	16.2 H (40 A)	16.4 H (41 A)	21.5 H (53 A)
NOISE	27B/7C	23B/7C	34B/8C	33B/11C	37B/10C	36B/9C
FLOODPLAIN	18.2 H (45 A)	18.2 H (45 A)	9.7 H (24 A)	9.7 H (24 A)	9.7 H (24 A)	15.4 H (38 A)
WETLANDS	9.0 H (22.3 A)	11.6 H (28.6 A)	6.2 H (15.2 A)	6.7 H (19.6 A)	4.5 H (11.0 A)	7.4 H (18.4 A)
FRESHWATER	1.6 H (4.0 A)	2.1 H (5.1 A)	1.1 H (2.6 A)	0.1 H (3.2 A)	1.4 H (3.4 A)	1.3 H (3.1 A)
SALTWATER	7.4 H (18.3 A)	9.5 H (23.5 A)	5.1 H (12.6 A)	6.6 H (16.4 A)	3.1 H (7.6 A)	6.1 H (15.3 A)
CULTURAL	3	2	3	2	4	3
HAZ MAT SITES	1	5	0	1	0	1

*COST INCLUDES BRIDGE COSTS SHOWING IN TABLE II-3

1 - C

➤ MARCH 25, 1997

SCDOT

SC170 PUBLIC HEARING

(BEAUFORT, SC)

1 - D

➤ JUNE 3, 1997

BEAUFORT COUNTY
COMMENTS TO SCDOT
RE: PUBLIC HEARING

AND

➤ JULY 8, 1997

SCDOT LETTER RESPONSE

COUNTY COUNCIL OF BEAUFORT COUNTY

ADMINISTRATION BUILDING
100 RIBAUT ROAD
POST OFFICE DRAWER 1228
BEAUFORT, SOUTH CAROLINA 29901-1228
TELEPHONE: (803) 525-7100
FAX: (803) 525-7181

H. EMMETT McCRACKEN, JR.
CHAIRMAN

CHARLES R. (RON) ATKINSON
VICE CHAIRMAN

COUNCIL MEMBERS

J.E. "PETE" COVINGTON
HERBERT N. GLAZE
DOROTHY P. GNANN
ELIZABETH P. GRACE
WILLIAM L. McBRIDE
EVA M. SMALLS
THOMAS C. TAYLOR
LEONARD M. TINNAN

MICHAEL G. BRYANT
COUNTY ADMINISTRATOR

DEPUTY ADMINISTRATORS

MORRIS C. CAMPBELL
THOMAS A. HENRIKSON, CPA
RANDOLPH L. WOOD, JR.

LADSON F. HOWELL
COUNTY ATTORNEY

SUZANNE M. RAINEY
CLERK TO COUNCIL

June 3, 1997

Mr. William M. DuBose, III
Director of Preconstruction
SC Department of Transportation
P.O. Box 191
Columbia, SC 29202

VIA FAX AND REGULAR MAIL

RE: SC Route 170 Widening - Career Education Center to SC Route 280

Dear Mr. DuBose:

Thank you for providing us with a set of plans for the proposed widening of SC 170 as presented at the March 25, 1997 public hearing in Beaufort. These documents have provided members of our County Council and key members of the County staff with the opportunity to carefully review every portion of this 13.5-mile widening as proposed by the South Carolina Department of Transportation (SCDOT). We have also taken into consideration the statements in your April 14, 1997 transmittal letter, that SCDOT is "revising the plans to reflect a five (5) lane ditch section from just west of Camp St. Mary's Road (S-81) to just east of Callawassie Road (S-54/790). This revision will reduce the right-of-way impacts in this area and provide more reasonable access to adjacent property owners."

This submittal represents the consolidated formal comments by Beaufort County Council to your design plans, as modified by the above-cited revision under consideration. We apologize for the belated submittal of our comments but, as you know, this section of highway is the arterial transportation "lifeline" linking the northern and southern portions of our County, and is so vitally important to the economic well-being of our community and its citizens. Therefore, we believe strongly that the final design must be done properly, not just quickly. We trust that you will consider the comments herein, which we sincerely offer in a constructive fashion, with some understanding of the perspective that we (County Council) have of the views of the 105,000 citizens we represent here in the fastest growing county in South Carolina.

It is our hope that the following comments will help SCDOT achieve the functionality and safety that is necessary, as well as provide for near-future population and traffic growth that is certain:

1. Regarding the design revision suggested in your April 14, 1997 letter, Beaufort Council is unalterably opposed to five-lane paving of any section of this beautiful rural highway, except

at/near major roadway intersections such as Callawassie Road or SC 802. Where a 48-foot (or greater) grassed/treed median cannot be utilized due to excessively severe right-of-way impacts, we respectfully request that you utilize a 15-foot curbed and grassed/landscaped median. Your letter of December 12, 1996 clearly indicates that SCDOT could utilize this type of median, while maintaining a posted speed limit of 55 mph, instead of five-lane paving. Though we would prefer that median cuts typically be no closer than 1,500 feet, we acknowledge that some closer median breaks, with left turn lanes, may be necessary to provide reasonable access for some property owners.

2. Beaufort County Council has recently approved a new large Planned Unit Development (PUD), of mixed residential and commercial properties, near the western terminus of the subject SC 170 widening. It is comtemplated that this 1,000-acre PUD will have two highway accesses, including an existing one on SC 170 south of the Career Education Center (CEC) and the other, a new access, on SC 170 east of CEC. Therefore, we request that SCDOT provide, at approximately Station 1+800, for the new access to/from the PUD — with acceleration and deceleration lanes on the south side of the eastbound lanes of SC 170, and with a left-turn lane (into the PUD) on the westbound side of the highway.

3. Station 3+100 to Station 3+800 (from Camp St. Mary's Road to the westerly most connection of Old Bailey's Road loop). In order to avoid/minimize the right-of-way impact on Stuckey's Furniture and other businesses planned for the Jasper County side of SC 170 in this area, we urge that you redesign this section with the two new travel lanes placed on the Beaufort County side, with the placement thereof south of the existing stand of large oak trees, thus creating a wider treed median. Median cuts with turn lanes could be placed as necessary to reasonably accommodate commercial properties on the north (Jasper County) side of the highway.

4. Station 3+800 to Station 6+500 (from Old Bailey's Road to east of the Callawassie General Store). Taper to a four-lane travel section with a 15-foot curbed and grassed median as mentioned above, but with a minimum 1,000-foot separation between median cuts.

5. Station 6+500 to 7+800 - Maintain the 48-foot grassed median design.

6. Station 7+800 to 8+700 - We urge you to locate the two new travel lanes to the north of the existing highway paving, placing the new lanes sufficiently behind (i.e., north of) the large live oak trees existing on the Fripp property, so as to preserve these trees in a new wide median. Then, transition back to the 48-foot grassed median at Station 8+700 (Bellinger Bluff), in order to reduce wetlands impact. Based on your April 24, 1997 letter to Mrs. M.H. (Tina) Fripp, SCDOT apparently concurs with this approach and intends to adjust the highway design accordingly. Thank you for your prompt reconsideration of this matter.

7. Station 12+000 to Broad River Bridge - We request that you use a 15-foot curbed and grassed median here, with minimum 1,500 foot separation between median cuts.

8. Broad River Bridge - Beaufort County Council strongly objects to the latest SCDOT proposal for a narrower bridge, with no outside "break-down lanes" and only a 4-foot median, on this critical span. We most emphatically urge that SCDOT return to an 82-foot bridge width, including 10-foot outside shoulders, that can doubly serve as break-down lanes and bicycle lanes, with a 14-foot median for safety reasons. We fully recognize that a wider bridge will cost more, but we also recognize that we will not likely see a replacement for "Broad River Bridge #2" for many decades into the future. Without the break-down lanes, a vehicle collision or mechanical breakdown on this 1.5-mile long bridge can tie up one or two lanes, with extremely high traffic loads, for an unnecessarily long period. This bridge is **not** the place to try to economize on the project.

9. Road S-20 to Robert Smalls School Road - Again, we urge that this highway section be based on a 15-foot curbed and grassed/landscaped median, with not less than 1,000 feet between median cuts. Beaufort County Council strongly opposes this highway section becoming a paved five-lane urban section like that existing east of the Robert Smalls School Road.

We are grateful for the time, assistance, and information that you and the SCDOT team have provided to Beaufort County in the past. We look forward to continuing a long and effective relationship with SCDOT. Please accept the foregoing comments in the constructive sense that we have intended.

It may be useful for Beaufort County representatives to meet with you and your staff to further discuss the issues and suggestions set forth in this letter. At the same meeting, our representatives could also review with you the list of suggestions we offered regarding the design of SC 170 from McGarvey's Corner to CEC, that Councilman Leonard Tinnan handed to you in Columbia, SC on March 19, 1997.

Please let me know if you need further information or clarification of our submittal and/or if you believe that a meeting of the parties might be useful.

Sincerely,

H. Emmett McCracken, Jr.
Chairman

LMT:sjs
cc: County Council Members
Mike Bryant
Bob Klink
Summer Rutherford
Maurice Ungaro
Henry Moss

South Carolina
Department of Transportation

955 Park Street
Post Office Box 191
Columbia, South Carolina 29202-0191

Office of the Director
(803) 737-1302 • Fax (803) 737-2038

Deputy Director of Engineering
(803) 737-1314 • Fax (803) 737-2038

Deputy Director of Finance and Administration
(803) 737-1240 • Fax (803) 737-1719

Deputy Director of Mass Transit
(803) 737-9720 • Fax (803) 737-9739

July 8, 1997

S.C. Route 170 Widening from U.S. Route 278 at the Career Education Center to west of S.C. Route 280, File 7.615, PIN 18286
Beaufort and Jasper Counties

Mr. H. Emmett McCracken, Jr.
Chairman, Beaufort County Council
Post Office Drawer 1228
Beaufort, SC 29901-1228

Dear Mr. McCracken:

This is to acknowledge and thank you for your recent comments and recommendations regarding the above described project. The following are our responses which have been numbered to correspond with those in your June 3, 1997 letter:

1. The Department has incorporated the use of a 48 ft. wide grassed median wherever possible. However, the use of this typical section is not practical in some areas due to amount of roadside development. Where the 48 ft. median can not be used, and where feasible, the Department will utilize a 15 ft. curbed and grassed median. This will be done with the understanding that Beaufort County will be responsible for maintaining the 15 ft. grassed median. Breaks in the curbed median will be minimized and spaced at least 1000 ft. apart.

2. The Department will provide for the new access that is planned for the large Planned Unit Development (PUD) near the Career Education Center. If the entrance to the PUD is constructed prior to the widening of S.C. Route 170, we will incorporate that entrance into our road plans by providing a break in the median with a left turn lane at that location. If warranted, acceleration and deceleration lanes will also be constructed.

3. We have carefully considered your recommendation to provide a wide median between Stations 3+100 and 3+800 with the widening to be constructed on the Beaufort County side of S.C. Route 170. For this to occur, the widening would shift to the Beaufort County side west of Camp St. Mary's Rd. (S-81) and shift back to the Jasper County side just east of Old Bailey's Rd. (S-18). The new alignment would severely impact the properties occupied by Drew Brothers Construction, Okatie Feed and Seed, Uncle Jim's Store and possibly the

Beaufort - Jasper County EMS Facility. In addition, Okatie Feed and Seed Company and Uncle Jim's Store have been identified as potential hazardous waste sites. An archaeological site located opposite Stuckey Brothers would also be impacted with this alignment. For these reasons, and in response to numerous public hearing comments, we plan to construct a five-lane typical section in this area, with the widening done to the north (Jasper County side) of the existing pavement. The five-lane section will begin just west of the Camp St. Mary's Rd. and end just east of Callawassie (approximately Station 6+500). The amount of roadside development in this area is not conducive to providing a landscaped median, however, the large live oak trees located opposite Stuckey Brothers will not be impacted by the five-lane widening.

4. S.C. Route 170 will be widened to five lanes from Station 3+100 to 6+500 as described above.

5. A 48 ft. grassed median will be utilized from Station 6+500 to 7+800.

6. As indicated in your letter, the Department has already agreed to provide a wide median to protect the large live oak at the Fripp property. We were able to incorporate this modification without significantly impacting adjacent properties or additional wetlands.

7. See paragraph number 9 below.

8. The Department understands your desire for a wider bridge with breakdown lanes. The Department strives to provide the safest and most efficient transportation system in the most feasible and economical way possible. The benefits of a wider bridge have been carefully considered, along with the savings associated with a more narrow bridge width. It is common for the Department to use a reduced bridge width on long bridges such as the Broad River bridge which is approximately 7300 feet. The reduction in width on the Broad River bridge from 82 feet to 60 feet will result in an estimated savings of $10,500,000. In this case, it is our belief that the potential savings far outweigh any disadvantages associated with a reduced bridge width.

9. We have reviewed your proposal for landscaped medians from Station 12+00 to the Broad River Bridge and from Road S-20 to Robert Smalls School Road. The Department does not object to the construction of landscaped medians in certain areas. However, since the landowners are unaware of this proposal, it is recommended that the County write the owners and provide them with an opportunity to comment on the landscaped medians. I have enclosed a sample letter regarding landscaped medians for your review. Please send these letters to the adjacent landowners with a copy to Mr. Mark Lester, SCDOT, P.O Box 191 Columbia, S.C. 29202. Once the comment period has passed, please

provide us a copy of the comments received and advise us of your decision concerning the landscaped medians by August 15, 1997. It is important that we resolve this issue by this date so that the opportunity to obligate right of way funding during fiscal year 1997 and the right of way acquisition process are not delayed.

As noted above, the South Carolina Department of Transportation strives to provide a safe and efficient transportation system in the most feasible and economical way possible. At the same time, the Department is vitally concerned with the preservation of the natural beauty of this State and strives to preserve the natural beauty in all phases of its operation. When planning for new construction, the Department considers impacts to property owners, as well as natural and cultural resources, and attempts to avoid these impacts where possible.

Your interest and cooperation is appreciated and the Department of Transportation can assure you that all suggestions, objections, and concerns are carefully considered before any final project decisions are made. I hope that you and others will find the completed project a significant improvement to the overall community good in this area of Beaufort County. We believe the best interest of the motoring public will be served with the improved highway.

If you need additional information or would like to schedule a meeting to discuss the above, please contact Assistant Project Engineer Mark Lester at telephone number (803) 737-1692.

Sincerely,

Original signed by
Wm. M. DuBose, III

William M. DuBose, III
Director of Preconstruction

WMD:sbc

Enclosure

CC: Leonard M. Tinnan, Beaufort County Council Member

File: PC/MCL

McCracken, Mrs. Smalls, Mr. Taylor and Mr. Tinnan. ABSENT - Mr. Atkinson, Mrs. Gnann and Mrs. Grace. Ms. Bauer garnered the six votes required for appointment.

* Robert Washington

It was moved by Mrs. Smalls, seconded by Mr. Glaze, that Council appoint Robert Washington, representing Solid Waste District #5, to serve a two-year term as a member on the Solid Waste Board. The vote was: FOR - Mr. Brafman, Mr. Covington, Mr. Glaze, Mr. McBride, Mr. McCracken, Mrs. Smalls, Mr. Taylor and Mr. Tinnan. ABSENT - Mr. Atkinson, Mrs. Gnann and Mrs. Grace. Mr. Washington garnered the six votes required for appointment.

Design of SC Highway 170 from Career Education Center to City of Beaufort

Mr. Tinnan explained several members of Council and staff met to review the design of SC 170 from the Career Education Center to the City of Beaufort as it was presented at public hearing by SCDOT. As a result of that very thorough review of members of Council and staff, a four-page letter of comments was prepared and submitted to Mr. William DuBose, SCDOT Director of Pre-Construction. In the last few weeks, the County has received a response that basically said SCDOT's appreciates receiving the County's comments, but plans to do otherwise in several areas: ① No five-lane hard paving, ② In those areas where SCDOT could not accommodate a 48-foot grassed median, that they at least provide a 15-foot curbed and grassed median, ③ In the Camp St. Mary's road area, SCDOT could not fulfill the County's request without impact on the commercial entities on the Jasper County side of the road (Haverty Construction, North American Storage), SCDOT has agreed to save the live oaks on the Beaufort County side of the highway just to the north of Camp St. Mary's, and ④ SCDOT refused the County's recommendations and insisted on using a narrower Broad River Bridge with no breakdown lanes and only a 4-foot median. The County has recommended that a wider bridge configuration be utilized with two 10-foot breakdown lanes one on each side and a 15-foot median. The cost difference is estimated at $11 million. There is an analogy in that SCDOT staff has proposed in Charleston County to replace the Cooper River Bridge with a six-lane bridge despite the fact that Charleston County has asked for an eight-lane bridge and is arguing against the proposed action of SCDOT.

Mr. Tinnan recommends Council convey to SCDOT it essentially does not accept their position and ask that it be appealed to the SCDOT Commission. In other words, let the Commission rule on whether the Staff position is correct or not. Additionally, though SCDOT has agreed to a curbed and grassed median from mid Lemon Island to the Broad River bridge, Staff recommends SCDOT continue this proposal on the other side of the Broad River bridge to the Beaufort City boundary. This request was rebuffed by SCDOT asking the County to conduct a survey of the property owners along SC Highway 170 to see if they will agree with this proposal and then SCDOT will reconsider the suggestion. This Council has the right to determine curbcut placement, number of curbcuts,

number of median cuts, and has no obligation to ask the abutting property owners whether they think a curbed and grassed median are appropriate through a letter or survey of some sort.

It was moved by Mr. Tinnan, seconded by Mr. Covington, that Council appeal to the SCDOT Commission that they revisit the proposed width of the Broad River bridge and the median from Broad River to Beaufort City limits. The vote was: FOR - Mr. Brafman, Mr. Covington, Mr. Glaze, Mr. McBride, Mr. McCracken, Mrs. Smalls, Mr. Taylor and Mr. Tinnan. ABSENT - Mr. Atkinson, Mrs. Gnann and Mrs. Grace. The motion passed.

Mr. Atkinson arrived at 7:00 p.m.

PUBLIC COMMENT

The Chairman opened the floor for public comment and recognized Mrs. Sally Murphy, a Sheldon resident, who referenced an article published in *The Beaufort Gazette* about a train operating from Yemassee to Port Royal Island to support the tourist trade. A train is a good idea and should not be limited just to tourists. Hopefully, someone working in concert with the Lowcountry Regional Transportation Authority will consider incorporating into their long-term plans a provision for providing transportation to the more rural areas of the County. With regard to the Comprehensive Plan, if Council allows large landowners and developers to negate what a great many citizens have contributed to the Plan, then Council would have wasted approximately $425,000 and, more important, it would have betrayed the trust of the citizens of this County.

ADJOURNMENT

Council adjourned at 7:05 p.m.

COUNTY COUNCIL OF BEAUFORT COUNTY

By:_____
H. Emmett McCracken, Jr.
Chairman

ATTEST:

_____
Clerk to Council

1 - E

➤ DECEMBER 10, 1997

MEETING WITH SCDOT (COLUMBIA)

AND

➤ DECEMBER 15, 1997

SCDOT FOLLOW-UP LETTER

AND

➤ DECEMBER 19, 1997

BEAUFORT COUNTY APPLICATION TO SIB

SC 170 PROJECT COST ESTIMATE
(By Beaufort County, 12/10/97)

Preliminary Engineering (1)	$ 4,531,362 <
Right of Way Acquisition (1)	2,484,000 <
Design-Build Contractor	
Roadway (1)	20,062,000
Chechessee Bridge - 70 ft. (1)	6,352,500
Broad River Bridge - 82 ft. (1)	39,015,600
Sub-total	65,430,100
Inflation Allowance (2)	10,313,419
Projected Contract Amount	75,743,519 <
Contingency Allowance (3)	11,361,527 <
Other Allowances	
SCDOT Project Management (4)	7,574,352 <
Median Landscaping	1,000,000 <
SC 802 Intersection Improvement	2,000,000 <
15-year Resurfacing (5)	2,700,000 <
TOTAL	$107,394,760

NOTES:

(1) SCDOT 3/7/96 estimate

(2) Calculated at 5% annually compounded for 3 years, 3/96-3/99 (estim. contract award date)

(3) 15% of projected contract amount

(4) 10% of projected contract amount

(5) Estimated at $200,000 per mile

SCDOT ORAL COMMENTS

(Re 12/10/97 County Estimate)

1. Right of way acquisition cost now projected to be $6,811,000 (vs. $2,484,000).

2. Five percent (5%) annual inflation probably low; (7.5%) more appropriate.

3. Suggest 20% contingency allowance (vs. 15%).

4. Wetlands impact resulting from "fly-over" lane at SC802 intersection could cause significant permitting delay.

SCDOT
South Carolina
Department of Transportation

955 Park Street
Post Office Box 191
Columbia, South Carolina 29202-0191

Office of the Executive Director
(803) 737-1302 • Fax (803) 737-2038

State Highway Engineer
(803) 737-1314 • Fax (803) 737-2038

Chief Financial Officer
(803) 737-1240 • Fax (803) 737-2014

Director of Mass Transit
(803) 737-9720 • Fax (803) 737-9739

December 15, 1997

S.C. Route 170 Widening from U.S. Route 278 at the Career Education Center to west of S.C. Route 280, File 7.615, PIN 18286
Beaufort and Jasper Counties

Honorable Leonard M. Tinnan
Beaufort County Councilman
37 Wagon Road
Hilton Head Island, SC 29928

Dear Mr. Tinnan:

The Department is excited about Beaufort County's efforts to accelerate the widening of S.C. Route 170 and looks forward to the success of the November, 1998 referendum and the receipt of State Infrastructure Bank (SIB) funding.

As you know, the Department has been working on this project since mid 1996 and to date has finalized the Environmental Assessment for the entire project and right of way plans for the section from Road S-20 to S.C. Route 280. Efforts have recently begun to acquire the necessary right of way on this portion of S.C. Route 170. We are currently preparing right of way plans for the remainder of the project and could begin acquiring right of way for this section as early as next summer if funding were available. Preparation of the necessary permit applications could also begin at this time. However, any change to the current scope of work could delay the permitting process significantly.

Based on the amount of work that has been done to date and the complexities that will be involved with obtaining the necessary environmental permits, it is possible that the S.C. Route 170 project could be engineered and constructed in the conventional manner as timely as a Design/Build contractor. However, many of the Metropolitan Planning Organizations (MPOs) and Council of Governments (COGs) across the state are considering the use of bonds and/or SIB financing to fund needed projects. As a result of these innovative financing techniques and the increased number of projects being administered by the Department, decisions must be made whether to request the assistance of local governments. Therefore, if Beaufort County is successful in obtaining SIB financing, a local governmental entity may be requested to develop the project using a Design/Build contractor.

Based on our review of the information provided by Beaufort County and considering current and future estimating trends, the Department estimates that the project could be completed for approximately $130 million to $145 million. These figures include all remaining engineering, right of way, and construction costs. The higher estimate includes modifications to the S.C. Route 802 intersection ($5,000,000) and the increased width of the Broad River bridge ($10,000,000). The Department and its consultant have studied the S.C. 802 intersection and have designed it to accommodate the anticipated future traffic growth in the area. Likewise, the Department understands your desire for a wider bridge with a 15 ft. median and breakdown lanes. The benefits of a wider bridge have been carefully considered, along with the savings associated with a more narrow bridge width. It is common for the Department to use a reduced width on long bridges such as the Broad River bridge which is approximately 7300 feet. The reduction in width on the Broad River bridge from 82 feet to 60 feet will result in an estimated savings of $10,000,000. In this case, it is our belief that the potential savings far outweigh any disadvantages associated with a reduced bridge width. If the County still wishes to request additional funds from the SIB for improvements to S.C. Route 802 and a wider bridge, please be aware that this change in the scope of work could delay the project by a year or more depending on the ability to obtain the necessary permits.

I hope that this information is helpful to you in the preparation of Beaufort County's application to the SIB. Your efforts are greatly appreciated and the Department looks forward to working with Beaufort County in completing this much needed project. If the Department can assist you in any way, please feel free to contact me or someone from my staff.

Sincerely,

Don H. Freeman

Don H. Freeman
State Highway Engineer

DHF:sbc

File: PC\MCL

CC: Honorable H. Emmett McCracken, Jr.
Chairman, Beaufort County Council

FIGURE II-2, TYPICAL BRIDGE CROSS SECTIONS

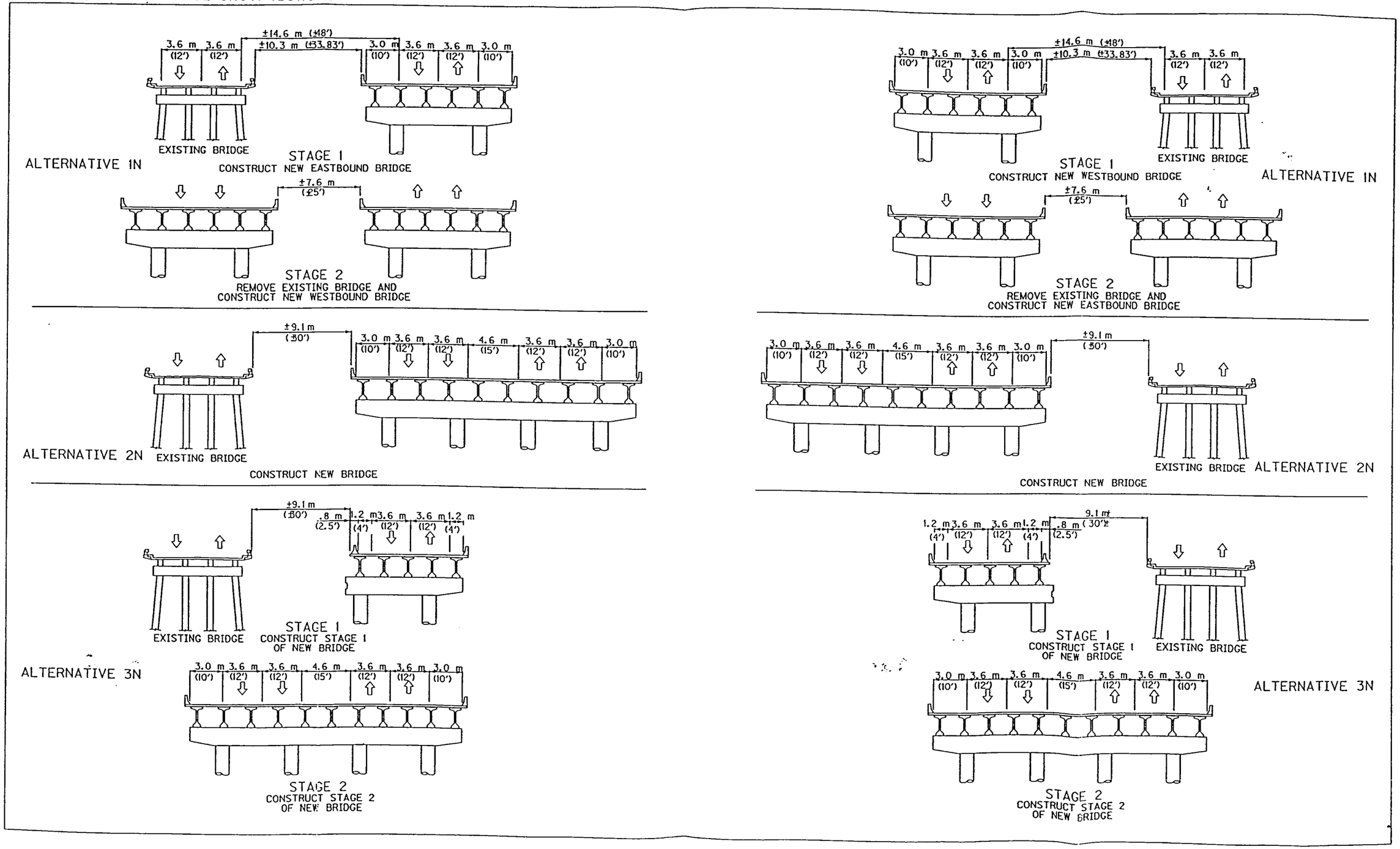

b. Unstaged Construction of a Single Four-lane Bridge with a Paved Median

This alternative involved the unstaged construction of a single four-lane bridge with four 3.6-meter (12-foot) lanes, a 4.6-meter (15-foot) paved center median and 3.0-meter (10-foot) outside shoulders. The construction would be undertaken as follows:

- traffic would be maintained on the existing two-lane bridge, while a new four-lane bridge was constructed parallel to and either north or south of the existing bridge; and,
- upon completion of the new four-lane bridge, traffic would be switched to it, while the existing two-lane bridge was demolished.

Alternatives to the north (Alternative 2N) and south (Alternative 2S) of the existing bridges were considered.

TABLE II-3, IMPACTS ASSOCIATED WITH THE BRIDGE ALTERNATIVES

IMPACTS	STAGED BRIDGES		UNSTAGED BRIDGE		STAGED BRIDGE		PREFERRED
	1N	1S	2N	2S	3N	3S	
CHECHESSEE RIVER							**STAGED BRIDGES 1S**
COST (MILLION)	$10.4	$10.8	$10.0	$10.6	$10.5	$11.0	$10.8
COMPLETION TIME (MONTHS)	16-20	16-20	21-25	21-25	19-23	19-23	16-20
DEN OF ANTIQUITY	TAKE	NO IMPACT	TAKE	NO IMPACT	TAKE	NO IMPACT	NO IMPACT
LEMON ISLAND MARINA (HAZ MAT SITE 6)	TAKE	NO TAKE	TAKE	NO TAKE	TAKE	NO TAKE	NO TAKE
EDGAR C. GLENN, JR. BOAT LANDING	NO TAKE	NO TAKE	NO TAKE	NO TAKE	NO TAKE	NO TAKE	NO TAKE
WATERLINE	MOVE	NO IMPACT	MOVE	NO IMPACT	MOVE	NO IMPACT	NO IMPACT
BROAD RIVER							**UNSTAGED BRIDGE ~~1S~~ 2S**
COST (MILLION)	$45.4	$45.4	$42.0	$42.0	$46.2	$46.2	$42.0
COMPLETION TIME (MONTHS)	22-28	22-28	25-31	25-31	24-30	24-30	25-31
BROAD RIVER BOAT LANDING	NO TAKE	NO TAKE	TAKE	NO TAKE	NO TAKE	NO TAKE	NO TAKE
WATERLINE	MOVE	NO IMPACT	MOVE	NO IMPACT	MOVE	NO IMPACT	NO IMPACT

I - F

➤ APRIL 9, 1998

BEAUFORT COUNTY'S REVISED ESTIMATE

SC 170 PROJECT COST ESTIMATE
(By Beaufort County, 4/9/98)

Preliminary Engineering (1)	$ 4,531,362 <
Right of Way Acquisition (6)	6,811,000 <
Design-Build Contractor	
Roadway (1)	20,062,000
Chechessee Bridge - 2@44 ft. (7)	10,800,000
Broad River Bridge - 83 ft. (7)	42,000,000
Sub-total	72,862,000
Inflation Allowance (2)	21,858,600
Projected Contract Amount	94,720,600 <
Contingency Allowance (3)	18,944,100 <
Other Allowances	
SCDOT Project Management (4)	9,472,000 <
Median Landscaping	1,000,000 <
15-year Resurfacing (5)	2,700,000 <
TOTAL	$138,179,062

NOTES:

(1) SCDOT 3/7/96 estimate
(2) Calculated at 7.5% annually for 4 years, 3/96-3/00 (estim. contract award date)
(3) 20% of projected contract amount
(4) 10% of projected contract amount
(5) Estimated at $200,000 per mile
(6) SCDOT 12/10/97 estimate
(7) SCDOT Environmental Assessment, 2/20/97

SECTION 2

CONFIGURATION OF BRIDGES

ROADWAY SEGMENT LEVEL OF SERVICE DEFINITIONS

Level of Service	Description	V/C Ratio
A	A condition of free flow, with low volumes and high speeds. Traffic density is low, with speeds controlled by driver desire, speed limits, and physical road conditions.	Less than 0.600
B	A condition of stable flow, with operating speeds beginning to be restricted somewhat by traffic conditions. Drivers still have reasonable freedom to select their speed and lane of operation.	0.600-0.699
C	A condition of stable flow, but speed and maneuverability are more adversely affected by higher traffic volumes. Most drivers are restricted in their freedom to select their own speed, change lanes, or pass.	0.700-0.799 Maximum for rural areas areas
D	Conditions approach unstable flow, with tolerable operating speeds being maintained though considerably affected by changes in operating conditions. Fluctuation in volume and temporary restrictions may cause substantial drops in operating speeds. Drivers have little freedom to maneuver, and comfort and convenience are low, but conditions can be tolerated for short periods of time.	0.800-0.899 Maximum for urbanized areas
E	Represents operation at speeds lower than in Level D, with volumes at or near the capacity of the highway.	0.900-0.999
F	Represents forced-flow operations at low speeds, where volumes are below capacity. Speeds are reduced substantially and stoppages may occur for short or long periods of time because of the downstream congestion. In the extreme, both speed and volume can drop to zero.	1.000 and Greater

SOURCE: KELLERCO 1997

SC170 TRAFFIC LOADS
(AT BROAD RIVER BRIDGE)

Year	Average Daily Traffic (ADT)	% Increase	Volume-To-Capacity (V/C Ratio)
1990	8,625	---	0.91
1994	10,900	26.4 (4 yrs.)	1.15
1995	11,500	5.5	1.21
1996	14,400	25.2	1.52
2015	40,400	---	4.25 (2 Lanes) 2.12 (4 Lanes) 1.42 (6 Lanes)

BRIDGE CROSS SECTIONS

➤ RECOMMENDED FOR BROAD RIVER

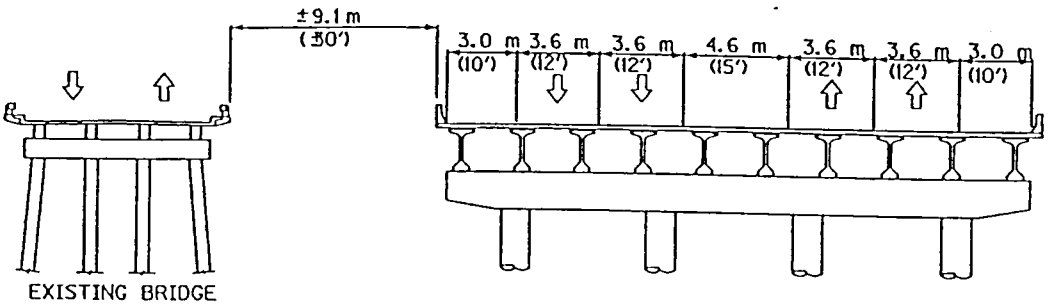

➤ RECOMMENDED FOR CHECHESSEE RIVER

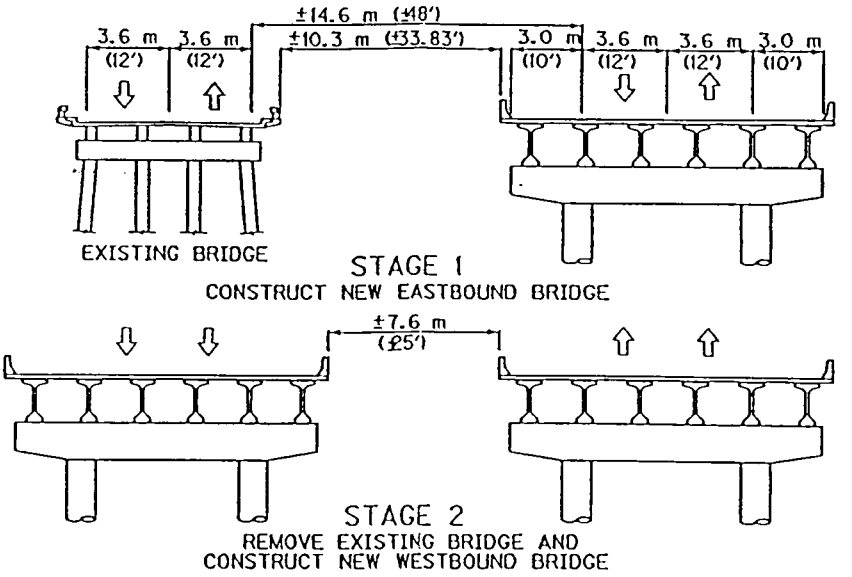

BENEFITS OF 83-FOOT BRIDGE

- Safer -- Wider median.
- Breakdown lanes avoid traffic tie-ups and delays; also accommodate bicycle traffic.
- Provides ability to re-stripe from four to six lanes (at negligible cost) as V/C ratio exceeds 1.50.

SECTION 3

FINANCIAL PARTICIPATION

INITIAL FUNDING PLAN

Source of Funds	Amount	Percentage
SCDOT (STIP)	$ 11,240,000	8.03
Beaufort County	25,000,000	17.86
State Infrastructure Bank	103,760,000	74.11
Total	$ 140,000,000	100.00

SCDOT STIP FUNDING
(C.E.C. - TO - SC280)

FY97	$ 1,350,000	(PE)
	1,000,000	(ROW)
FY98	-0-	
FY99	5,240,000	(ROW)
FY00	-0-	
FY01	-0-	
FY02	6,000,000	(C)
TOTAL	$ 13,590,000	

SALES TAX REVENUE

CAL. YEAR	1% YIELD	ANNUAL GROWTH
1993A	$ 11,469,061	--
1994A	12,569,561	+9.60
1995A	13,648,371	+8.58
1996A	14,418,508	+5.64 (3)
1997A	15,723,425	+9.05
1998P	16,981,299	+8.00 P
1999P	18,339,802	+8.00 P
2000P	19,806,986	+8.00 P

NOTES:

1. **With start of 1% tax collection 6/1/99 and stop on 11/30/00, yield will be $29,527,081, based on 8% annual average growth of taxable sales.**

2. **A = Actual Figures, based on SC Department of Revenue Report; P = Projected.**

3. **Two hurricane evacuations during 1996.**

Beaufort County
Sales Tax Information
3/27/98

reported in	gross sales	net taxable sales	1% sales tax
1/96	143,958,505.56	101,094,812.67	1,010,948.13
2/96	120,560,610.69	78,406,219.66	784,062.20
3/96	131,153,134.50	88,865,902.33	888,659.02
4/96	166,129,974.02	119,716,959.24	1,197,169.59
5/96	238,015,844.46	152,939,943.38	1,529,399.43
6/96	190,018,106.16	138,221,868.37	1,382,218.68
7/96	233,002,433.40	143,300,877.20	1,433,008.77
8/96	195,366,062.05	144,512,872.40	1,445,128.72
9/96	189,547,130.53	141,645,302.09	1,416,453.02
10/96	193,009,720.86	111,150,712.30	1,111,507.12
11/96	172,864,726.30	117,263,545.60	1,172,635.46
12/96	149,892,095.55	104,731,758.55	1,047,317.59
	2,123,518,344.08	1,441,850,773.79	14,418,507.74
1/97	164,414,075.80	109,403,254.80	1,094,032.55
2/97	135,960,197.04	85,468,643.80	854,686.44
3/97	142,791,702.66	98,717,016.10	987,170.16
4/97	209,680,110.05	126,954,781.25	1,269,547.81
5/97	217,485,715.80	159,466,852.80	1,594,668.53
6/97	193,189,589.40	139,998,003.80	1,399,980.04
7/97	230,629,467.00	161,066,245.00	1,610,662.45
8/97	224,915,713.90	165,211,064.10	1,652,110.64
9/97	207,315,160.56	154,866,636.88	1,548,666.37
10/97	197,890,356.07	132,665,964.47	1,326,659.64
11/97	168,430,193.40	116,049,031.56	1,160,490.32
12/97	174,387,425.53	122,475,053.92	1,224,750.54
	2,267,089,707.21	1,572,342,548.48	15,723,425.48
1/98	188,581,893.20	118,464,062.20	1,184,640.62
2/98	139,539,339.86	92,279,051.51	922,790.52
	328,121,233.06	210,743,113.71	2,107,431.14

sales are reported on a one month delay
January sales reported in February, etc.

REVISED FUNDING PLAN
(WITH WIDER BRIDGES ONLY)

Source of Funds	Project Cost					
	Case 1		Case 2		Case 3	
	$	%	$	%	$	%
SCDOT	13,590,000	9.7	13,590,000	10.5	13,590,000	11.3
Beaufort County	30,000,000	21.4	30,000,000	23.1	30,000,000	25.0
SIB	96,410,000	68.9	86,410,000	66.4	76,410,000	64.7
Total	140,000,000	100.0	130,000,000	100.0	120,000,000	100.0

Beaufort County
Estimated Cash Flow for SC 170 Project

	SCDOT /STIP	Sales Tax	SIB	Total Revenues	Total Costs
Prior to July 1998	2,350,000	0	0	2,350,000	2,350,000
July 1998	0	0	0	0	0
August 1998	0	0	0	0	0
September 1998	0	0	0	0	0
October 1998	5,240,000	0	0	5,240,000	5,240,000
November 1998	0	0	0	0	0
December 1998	0	0	0	0	0
January 1999	0	0	0	0	0
February 1999	0	0	0	0	0
March 1999	0	0	0	0	0
April 1999	0	0	0	0	0
May 1999	0	0	0	0	0
June 1999	0	0	0	0	0
July 1999	0	0	0	0	0
August 1999	0	1,666,666	0	1,666,666	791,667
September 1999	0	1,666,667	0	1,666,667	791,667
October 1999	0	1,666,667	0	1,666,667	791,667
November 1999	0	1,666,666	0	1,666,666	791,667
December 1999	0	1,666,667	0	1,666,667	791,667
January 2000	0	1,666,667	0	1,666,667	791,667
February 2000	0	1,666,666	0	1,666,666	4,303,381
March 2000	0	1,666,667	23,429	1,690,096	4,303,381
April 2000	0	1,666,667	2,636,714	4,303,381	4,303,381
May 2000	0	1,666,666	2,636,715	4,303,381	4,303,381
June 2000	0	1,666,667	2,636,714	4,303,381	4,303,381
July 2000	0	1,666,667	2,636,714	4,303,381	4,303,381
August 2000	0	1,666,666	1,845,048	3,511,714	3,511,714
September 2000	0	1,666,667	1,845,047	3,511,714	3,511,714
October 2000	0	1,666,667	1,845,047	3,511,714	3,511,714
November 2000	0	1,666,666	1,845,048	3,511,714	3,511,714
December 2000	0	1,666,667	1,845,047	3,511,714	3,511,714
January 2001	0	1,666,667	1,845,047	3,511,714	3,511,714
February 2001	0	0	3,511,714	3,511,714	3,511,714
March 2001	0	0	3,511,714	3,511,714	3,511,714
April 2001	0	0	3,511,714	3,511,714	3,511,714
May 2001	0	0	3,511,714	3,511,714	3,511,714
June 2001	0	0	3,511,714	3,511,714	3,511,714
July 2001	0	0	3,511,714	3,511,714	3,511,714
August 2001	0	0	3,511,714	3,511,714	3,511,714
September 2001	0	0	3,511,714	3,511,714	3,511,714
October 2001	3,000,000	0	511,714	3,511,714	3,511,714
November 2001	0	0	3,511,714	3,511,714	3,511,714
December 2001	0	0	3,511,714	3,511,714	3,511,714
January 2002	0	0	3,511,714	3,511,714	3,511,714
February 2002	0	0	3,511,714	3,511,714	3,511,714
March 2002	0	0	3,511,714	3,511,714	3,511,714
April 2002	3,000,000	0	511,714	3,511,714	3,511,714
May 2002	0	0	3,511,714	3,511,714	3,511,714
June 2002	0	0	3,511,714	3,511,714	3,511,714
July 2002	0	0	3,511,714	3,511,714	3,511,714
August 2002	0	0	3,511,714	3,511,714	3,511,714
September 2002	0	0	3,511,714	3,511,714	3,511,714
October 2002	0	0	3,511,714	3,511,714	3,511,714
November 2002	0	0	3,511,714	3,511,714	3,511,714
December 2002	0	0	3,511,714	3,511,714	3,511,714
	13,590,000	30,000,000	96,410,000	140,000,000	140,000,000

Beaufort County
Estimated Cash Flow for SC 170 Project

	SCDOT /STIP	Sales Tax	SIB	Total Revenues	Total Costs
Prior to July 1998	2,350,000	0	0	2,350,000	2,350,000
July 1998	0	0	0	0	0
August 1998	0	0	0	0	0
September 1998	0	0	0	0	0
October 1998	5,240,000	0	0	5,240,000	5,240,000
November 1998	0	0	0	0	0
December 1998	0	0	0	0	0
January 1999	0	0	0	0	0
February 1999	0	0	0	0	0
March 1999	0	0	0	0	0
April 1999	0	0	0	0	0
May 1999	0	0	0	0	0
June 1999	0	0	0	0	0
July 1999	0	0	0	0	0
August 1999	0	1,666,666	0	1,666,666	791,667
September 1999	0	1,666,667	0	1,666,667	791,667
October 1999	0	1,666,667	0	1,666,667	791,667
November 1999	0	1,666,666	0	1,666,666	791,667
December 1999	0	1,666,667	0	1,666,667	791,667
January 2000	0	1,666,667	0	1,666,667	791,667
February 2000	0	1,666,666	0	1,666,666	4,017,667
March 2000	0	1,666,667	0	1,666,667	4,017,667
April 2000	0	1,666,667	1,803,000	3,469,667	4,017,667
May 2000	0	1,666,666	2,351,001	4,017,667	4,017,667
June 2000	0	1,666,667	2,351,000	4,017,667	4,017,667
July 2000	0	1,666,667	2,351,000	4,017,667	4,017,667
August 2000	0	1,666,666	1,559,334	3,226,000	3,226,000
September 2000	0	1,666,667	1,559,333	3,226,000	3,226,000
October 2000	0	1,666,667	1,559,333	3,226,000	3,226,000
November 2000	0	1,666,666	1,559,334	3,226,000	3,226,000
December 2000	0	1,666,667	1,559,333	3,226,000	3,226,000
January 2001	0	1,666,667	1,559,333	3,226,000	3,226,000
February 2001	0	0	3,226,000	3,226,000	3,226,000
March 2001	0	0	3,226,000	3,226,000	3,226,000
April 2001	0	0	3,226,000	3,226,000	3,226,000
May 2001	0	0	3,226,000	3,226,000	3,226,000
June 2001	0	0	3,226,000	3,226,000	3,226,000
July 2001	0	0	3,226,000	3,226,000	3,226,000
August 2001	0	0	3,226,000	3,226,000	3,226,000
September 2001	0	0	3,226,000	3,226,000	3,226,000
October 2001	3,000,000	0	226,000	3,226,000	3,226,000
November 2001	0	0	3,226,000	3,226,000	3,226,000
December 2001	0	0	3,226,000	3,226,000	3,226,000
January 2002	0	0	3,226,000	3,226,000	3,226,000
February 2002	0	0	3,226,000	3,226,000	3,226,000
March 2002	0	0	3,226,000	3,226,000	3,226,000
April 2002	3,000,000	0	226,000	3,226,000	3,226,000
May 2002	0	0	3,226,000	3,226,000	3,226,000
June 2002	0	0	3,226,000	3,226,000	3,226,000
July 2002	0	0	3,226,000	3,226,000	3,226,000
August 2002	0	0	3,226,000	3,226,000	3,226,000
September 2002	0	0	3,226,000	3,226,000	3,226,000
October 2002	0	0	3,226,000	3,226,000	3,226,000
November 2002	0	0	3,226,000	3,226,000	3,226,000
December 2002	0	0	3,226,000	3,226,000	3,226,000
	13,590,000	30,000,000	86,410,000	130,000,000	130,000,000

Beaufort County
Estimated Cash Flow for SC 170 Project

	SCDOT /STIP	Sales Tax	SIB	Total Revenues	Total Costs
Prior to July 1998	2,350,000	0	0	2,350,000	2,350,000
July 1998	0	0	0	0	0
August 1998	0	0	0	0	0
September 1998	0	0	0	0	0
October 1998	5,240,000	0	0	5,240,000	5,240,000
November 1998	0	0	0	0	0
December 1998	0	0	0	0	0
January 1999	0	0	0	0	0
February 1999	0	0	0	0	0
March 1999	0	0	0	0	0
April 1999	0	0	0	0	0
May 1999	0	0	0	0	0
June 1999	0	0	0	0	0
July 1999	0	0	0	0	0
August 1999	0	1,666,666	0	1,666,666	791,667
September 1999	0	1,666,667	0	1,666,667	791,667
October 1999	0	1,666,667	0	1,666,667	791,667
November 1999	0	1,666,666	0	1,666,666	791,667
December 1999	0	1,666,667	0	1,666,667	791,667
January 2000	0	1,666,667	0	1,666,667	791,667
February 2000	0	1,666,666	0	1,666,666	3,731,952
March 2000	0	1,666,667	0	1,666,667	3,731,952
April 2000	0	1,666,667	945,857	2,612,524	3,731,952
May 2000	0	1,666,666	2,065,286	3,731,952	3,731,952
June 2000	0	1,666,667	2,065,285	3,731,952	3,731,952
July 2000	0	1,666,667	2,065,285	3,731,952	3,731,952
August 2000	0	1,666,666	1,273,620	2,940,286	2,940,286
September 2000	0	1,666,667	1,273,619	2,940,286	2,940,286
October 2000	0	1,666,667	1,273,619	2,940,286	2,940,286
November 2000	0	1,666,666	1,273,620	2,940,286	2,940,286
December 2000	0	1,666,667	1,273,619	2,940,286	2,940,286
January 2001	0	1,666,667	1,273,619	2,940,286	2,940,286
February 2001	0	0	2,940,286	2,940,286	2,940,286
March 2001	0	0	2,940,286	2,940,286	2,940,286
April 2001	0	0	2,940,286	2,940,286	2,940,286
May 2001	0	0	2,940,286	2,940,286	2,940,286
June 2001	0	0	2,940,286	2,940,286	2,940,286
July 2001	0	0	2,940,286	2,940,286	2,940,286
August 2001	0	0	2,940,286	2,940,286	2,940,286
September 2001	0	0	2,940,286	2,940,286	2,940,286
October 2001	3,000,000	0	(59,714)	2,940,286	2,940,286
November 2001	0	0	2,940,286	2,940,286	2,940,286
December 2001	0	0	2,940,286	2,940,286	2,940,286
January 2002	0	0	2,940,286	2,940,286	2,940,286
February 2002	0	0	2,940,286	2,940,286	2,940,286
March 2002	0	0	2,940,286	2,940,286	2,940,286
April 2002	3,000,000	0	(59,714)	2,940,286	2,940,286
May 2002	0	0	2,940,286	2,940,286	2,940,286
June 2002	0	0	2,940,286	2,940,286	2,940,286
July 2002	0	0	2,940,286	2,940,286	2,940,286
August 2002	0	0	2,940,286	2,940,286	2,940,286
September 2002	0	0	2,940,286	2,940,286	2,940,286
October 2002	0	0	2,940,286	2,940,286	2,940,286
November 2002	0	0	2,940,286	2,940,286	2,940,286
December 2002	0	0	2,940,286	2,940,286	2,940,286
	13,590,000	30,000,000	76,410,000	120,000,000	120,000,000

SECTION 4

SALES TAX REFERENDUM

PROPOSED REFERENDUM QUESTION

OFFICIAL BALLOT, REFERENDUM
APPROVAL OF A SPECIAL PURPOSE ONE PERCENT SALES AND USE TAX
BEAUFORT COUNTY, SOUTH CAROLINA
NOVEMBER 3, 1998

Question Number 1

I approve a special purpose one percent sales and use tax to be imposed in Beaufort County for not more than eighteen (18) months, beginning June 1, 1999, to supplement available South Carolina Department of Transportation (SCDOT) and State Infrastructure Bank (SIB) funds to accelerate the completion of the following project:

Widen to divided four lanes approximately 13 miles of SC Highway 170 from the Career Education Center to the Beaufort City limits near SC 280, including new bridges over the Chechessee and Broad Rivers, for not more than $30,000,000 in addition to SCDOT and SIB funds.

The collection of the special purpose sales tax shall automatically cease on November 30, 2000, or upon the collection of $30,000,000, whichever shall occur first.

YES [ ]

NO [ ]

Those voting in favor of the referendum question shall punch the number position on the ballot card beside the word "Yes," and those voting against the question shall punch the position beside the word "No."

Before leaving the voting booth, fold the ballot so that the initials of the Poll Manager may be seen on the outside.

APPENDIX B

RESOLUTIONS AND LETTERS OF SUPPORT

Municipalities

Town of Hilton Head Island
City of Beaufort
Town of Port Royal
Town of Bluffton

Other Governmental Entities

Beaufort County Economic Development Board
Beaufort County Board of Education
Jasper County Council
Lowcountry Council of Governments
Burton Fire District
Bluffton Township Fire District
United States Marine Corps Air Station - Beaufort
Beaufort/Jasper Water and Sewer Authority
Beaufort/Jasper Comprehensive Health Services
Lowcountry Regional Transportation Authority
Technical College of the Lowcountry
Beaufort/Jasper County Commission on Higher Education

Local Business and Civic Organizations

Hilton Head Island Chamber of Commerce
Beaufort Area Chamber of Commerce
Hilton Head Hospitality Association
Homebuilders Association of Hilton Head Island
Homebuilders Association of the Lowcountry
Beaufort Memorial Hospital
Greater Island Committee
Beaufort County Republican Party
Spring Island Property Owners Association
Northern Beaufort County Committee

Newspaper Editorials

The Island Packet
The Beaufort Gazette
Savannah Morning News

A RESOLUTION OF THE TOWN COUNCIL OF THE TOWN OF HILTON HEAD ISLAND IN SUPPORT OF THE BEAUFORT COUNTY COUNCIL'S RESOLUTION TO SUMIT A FINANCIAL ASSISTANCE APPLICATION FOR SOUTH CAROLINA HIGHWAY 170 TO THE SOUTH CAROLINA TRANSPORTATION INFRASTRUCTURE BANK INCLUDING A $25,000,000 LOCAL MATCH CONTINGENT UPON VOTER APPROVAL OF A LIMITED TERM ONE-PERCENT LOCAL SALES TAX IN A PUBLIC REFERENDUM ON NOVEMBER 3, 1998.

WHEREAS, South Carolina Highway 170 (SC 170) is critical to the economic well-being of Beaufort County and the Town of Hilton Head Island; and

WHEREAS, SC 170 is vital to the Town of Hilton Head Island, carrying its citizens to Beaufort and back as well as bringing thousands of employees to the Town on a daily basis; and

WHEREAS, SC 170 is recognized as a dangerous highway which needs substantial improvements in order to provide for the safe and efficient transportation of vehicles, goods and services between the Town and the northern sector of Beaufort County; and

WHEREAS, the needed improvements, including widening the highway to four travel lanes and new bridges across the Chechessee and Broad Rivers, are projected to cost over $100,000,000 for the section from the Beaufort/Jasper Career Education Center to the Beaufort city limits; and

WHEREAS, it is clear that the South Carolina Department of Transportation will not be able to provide sufficient funding to make these improvements for many years, despite the strong feeling of the Town Council of the Town of Hilton Head Island that the responsibility to build and improve such highways is a state and federal responsibility that is not being adequately addressed by either; and

WHEREAS, the South Carolina General Assembly did, during its 1997 session, pass the Transportation Infrastructure Bank Act, thereby creating an instrumentality of the State known as the South Carolina Transportation Infrastructure Bank (SIB), and authorized said SIB to provide financial assistance to government units for constructing highway facilities necessary for public purposes, with the stipulation that **"Preference must be given to eligible projects which have local financial support"**; and

WHEREAS, the SIB requires evidence to substantiate public benefit including, but not limited to, resolutions of support from the municipalities within the applicant county; and

WHEREAS, the South Carolina Department of Transportation could, with SIB approval in 1998 of Beaufort County's application, begin final design and construction management of these improvements in early 1999, with project completion within three years thereafter; and

WHEREAS, of all of the feasible revenue generating options for local support, a limited term one-percent sales tax, if approved by public referendum, would provide the shortest term, least cost solution for property owners and residents in the Town of Hilton Head Island; and

WHEREAS, the Beaufort County Council, on November 24, 1997, approved a Resolution to submit a financial assistance application for SC 170 to the SIB by December 19, 1997, including a $25,000,000 local match contingent upon voter approval of a limited term one-percent local sales tax by public referendum on November 3, 1998; and

WHEREAS, the early improvement of SC 170 will clearly benefit the mobility and safety of the residents of Hilton Head Island as well as the thousands of employees of Hilton Head businesses that commute daily on this highway, and thus support the continued economic viability of the Town.

NOW, THEREFORE, BE IT, AND IT HEREBY IS, RESOLVED BY THE TOWN COUNCIL FOR THE TOWN OF HILTON HEAD ISLAND, SOUTH CAROLINA, THAT the Town Council of the Town of Hilton Head Island concurs with and fully supports the County's stated plan for submittal of a financial assistance application to the SIB and pledges to support the County Council in promoting, without the use of any public funds, the passage of said sales tax referendum for this worthwhile project.

MOVED, APPROVED, AND ADOPTED THIS 16th DAY OF DECEMBER, 1997.

Thomas D. Peeples

Thomas D. Peeples, Mayor

ATTTEST:

Sandi T. Santaniello

Sandi T. Santaniello, CMC, Town Clerk

LOWCOUNTRY COUNCIL OF GOVERNMENTS • P.O. BOX 98, YEMASSEE, SC 29945 • (803) 726-5536/FAX 726-5165
LOWCOUNTRY REGIONAL DEVELOPMENT CORPORATION • LOWCOUNTRY AREA AGENCY ON AGING

A RESOLUTION

WHEREAS, South Carolina Highway 170 (SC 170) is a critical commercial corridor for Beaufort County and the Lowcountry Region; and

WHEREAS, the two-lane section of SC 170 between the City of Beaufort and the Beaufort-Jasper Career Education Center is operating well beyond its design capacity and is neither safe nor efficient; and

WHEREAS, widening SC 170 to four lanes and building new bridges over the Broad and Chechessee Rivers will cost an estimated $100 million; and

WHEREAS, sufficient Federal and State funds are not available to fund this project in the foreseeable future; and

WHEREAS, Beaufort County Council has developed a project application to the State Infrastructure Bank for these much-needed SC 170 improvements.

NOW, THEREFORE, BE IT RESOLVED by the Lowcountry Council of Governments, acting through its Executive Committee, that the Beaufort County plan to improve SC 170 as set out in Beaufort County Council's Resolution of November 24, 1997 is hereby endorsed; and further

That Lowcountry Council of Governments urges all local jurisdictions and public officials in the Lowcountry Region to actively support the Beaufort County plan to improve SC 170 and specifically to support the passage of a limited term one percent sales tax referendum in Beaufort County to fund the local contribution for the project.

DONE this tenth day of December, 1997.

Lowcountry Council of Governments

Isaiah Orr
Chairman

Attest:

Theodore D. Kinard
Secretary

Greater Beaufort
Chamber of Commerce

December 4, 1997

H. Emmett McCracken, Jr, Chairman
Beaufort County Council
PO Box 1228
Beaufort, SC 29901-1228

Dear Chairman McCracken:

The Greater Beaufort Chamber of Commerce Board of Directors voted unanimously to support the expansion of SC 170 from the Beaufort Jasper Career Education Center to the Beaufort city limits. The improvements should include widening to four travel lanes and new bridges across the Chechessee and Broad Rivers. The highway is presently carrying an overload of traffic and the traffic will continue to increase as the population expands. This highway is one of the most dangerous corridors in the County and the State.

Given the current and projected growth and development, Beaufort Country will be at a major disadvantage without the improvements to SC 170. Tourism is one of our largest industries. We must make SC 170 a safe highway for our workers, residents, and visitors as soon as possible. The need for good roads to transport people safely is essential for the continued economic growth of the area.

We support the County Council's plans to submit a financial assistance application to South Carolina Transportation Infrastructure Bank. The Chamber of Commerce Board of Directors voted to support a special one cent sales tax as one of the local funding options as long as it had a sunset clause and was brought to the voters in the form of a referendum in November 1998. In the past, the one cent sales tax did not pass because of the concerns of creating a new authority and the length of the tax. There is a general consensus throughout the business community that a one cent sales tax with a limited purpose and time frame will gain voter approval.

Sincerely,

Jean Lebro

Jean Lebro
Executive Vice President

cc L. Tinnan, Councilor

1006 Bay Street • P.O. Box 910 • Beaufort, SC 29901-0910 • (803) 524-3163

Hilton Head Hospitality Association

producers of SpringFest

Hilton Head Hospitality Association ENVIRONMENTAL INITIATIVE

December 12, 1997

Mr. Emmett McCracken, Jr.
Chairman
Beaufort County Council
PO Drawer 1228
Beaufort, SC 29901

Dear Mr. McCracken:

The Board of Directors of the Hilton Head Hospitality Association fully endorses the Beaufort County Council's resolution to apply for SC Transportation Infrastructure Bank (SIB) funds to pay for improvements to SC 170 and supports the option of using a one percent special purpose sales tax to generate local funding. Safe roads in Beaufort County are of utmost importance to our citizens, our visitors, and our community's economic well being.

The HHHA Board of Directors still holds the position that it is the State's responsibility to build state roads. However, providing local financial support and working through the SIB appears to be the fastest way to improve SC170, one of the most deadly roads in the state. Concerning local financial support, our Board of Directors has considered every source of income and concluded that a one percent special purpose sales tax is the most equitable for our community for several reasons. First, the tax is not burdensome on just a single industry and will be shared by both residents and visitors. Second, residents of Jasper County (through which SC170 passes) will also share the responsibility of financial support as they frequent Beaufort County establishments and benefit from improvements. Third, the tax will be imposed for a period of only 15 to 18 months and not indefinitely.

We encourage the SC Transportation Infrastructure Bank to look favorably upon this much needed and worthwhile project.

Sincerely,

Roy Prescott

Roy Prescott
President

P.O. Box 5097 • Hilton Head Island, SC 29938 • (803) 686-4944 FAX (803) 686-4169

The Beaufort Gazette

FOUNDED IN 1897

Sunday, November 30, 1997

Editorial and
Business Offices:
1556 Salem Road
Burton, S.C. 29902

Mailing Address:
P.O. Box 399
Beaufort, S.C. 29901
Tel: (803) 524-3183

JOHN L. REATH
Publisher

JAMES A. CAFO
Editor

ANN ROSE
Advertising Director

ROY G. DANFORD
Circulation Manager

STEPHEN E. BALDWIN
Production Manager

Widening S.C. 170

County Council steers right course

Beaufort County may or may not receive a share of State Infrastructure Bank funding to improve S.C. 170, but County Council has steered a course in the right direction.

On Monday council voted 7-4 to file an application for a grant from the SIB with plans to hold a November 1998 referendum on a 1-cent special project tax. Special project taxes were approved by the General Assembly, along with legislation creating the SIB. A special project tax has a specified life (in months or dollars) and the money goes to a specific project. The money can't pay for another project and it can't be extended.

The SIB was created because S.C. Department of Transportation, the Legislature and the governor realized the state's infrastructure needs vastly outweigh the state's ability to pay for them. The bank, which already has received applications from other areas of the state, only has $600 million, half of the amount Gov. David Beasley initially proposed in his State of the State address.

Members of the SIB have said projects with a local contribution will fare better on the priority list.

County Council has discussed a funding mechanism for the widening of a 13.5-mile segment of S.C. 170 from the Beaufort-Jasper Career Education Center to the Beaufort city limits. The road would be widened from two to four lanes, including new bridges over the Broad and Chechessee rivers.

S.C. 170 is the major artery between northern and southern Beaufort County. Thousands of people use the road each week to get to and from jobs at Bluffton, Hilton Head and Savannah. The road is often clogged with traffic and considered one of the most dangerous in the state, with more than 21 people killed over the past five years.

County Council discussed a one-cent sales tax for the widening project last year prior to creation of the SIB. The one-cent sales tax was to be levied for eight years with the anticipation of raising $100 million for the S.C. 170 project. DOT would have reimbursed the county over a period of years and the money would have been used to improve other roads in the county. Voters by a 2-1 margin rejected the plan in a November 1996 referendum. That was the third time voters had rejected a one-cent sales tax.

Council's new proposal is to ask voters to approve a one-cent tax for 18 months or until 25 to 30 percent of the project's cost has been raised. This plan is sound for several reasons:

- It has the backing of municipalities.
- The tax is for a shorter period of time and would not require a separate board to oversee use of the money.
- A large portion of the tax would be paid by people who don't live in the county but enjoy amenities along the coast.

According to SIB Chairman Howard Covington, Beaufort County doesn't need to raise taxes to come up with its matching share of money to improve the road. However, the matching share raised any other way would come at the expense of other road projects. For instance, Covington says Beaufort County could agree to assume maintenance of some state roads and grant the state easements it needs for other road projects. The money for maintenance and easements has to be raised in some manner. A likely place would be the property tax, which vacationers don't have to pay.

At this point council doesn't have a fall-back plan. Because the one-cent sales tax is based on assumption, Covington says the plan doesn't have much credibility with the SIB.

The council steered a course in the right direction. It just needs fine tuning. Council would be wise to quickly devise a fall-back plan, a plan that the SIB would accept if voters reject the one-cent sales tax in November.

Rec. 1-22-98
CC

HOLLY CORK
SENATOR, BEAUFORT COUNTY
SENATORIAL DISTRICT NO.46

SENATE ADDRESS:
POST OFFICE BOX 142
COLUMBIA, SC 29202
TEL: (803) 212-6048
FAX: (803) 212-6299

HOME ADDRESS:
POST OFFICE BOX 2447
BEAUFORT, SC 29901
(803) 521-1399

COMMITTEES:
AGRICULTURE AND NATURAL RESOURCES
EDUCATION
JUDICIARY
MEDICAL AFFAIRS
CORRECTIONS AND PENOLOGY
STATE HOUSE

January 21, 1998

Mr. Howard "Champ" Covington, Chairman
State Infrastructure Bank Board
Post Office Box 16449
Greenville, SC 29606

Dear Mr. Covington,

The purpose of this letter is to express the strong support of the Beaufort County Legislative Delegation for Infrastructure Bank funding to expedite the critically-needed improvements of Highway 170.

This road, which links southern and northern Beaufort County as well as neighboring communities, carries daily the vital labor force of Hilton Head Island's tourism industry. It is acknowledged by DOT engineers as "the deadliest road in the state." The economic well-being of our county depends upon the widening of Highway 170, and the very lives of our constituents rely on its improved safety.

Please consider this letter an official statement of support for Beaufort County's Infrastructure Bank eligibility.

Respectfully submitted,

Senator Holly Cork

Senator McKinley Washington, Jr.

Representative Walter P. Eloyd

Representative Vicki T. Mullen

Representative Clementa C. Pinckney

Representative Edie M. Rodgers

HC/cmp